| GB | UNITED KINGDOM |
| --- | --- |

# Diagram / Parts List

## DBO180

## 125MM CRDLS RNDM ORBIT SANDER

2024/12

# (GB) DBO180 / 125MM CRDLS RNDM ORBIT SANDER

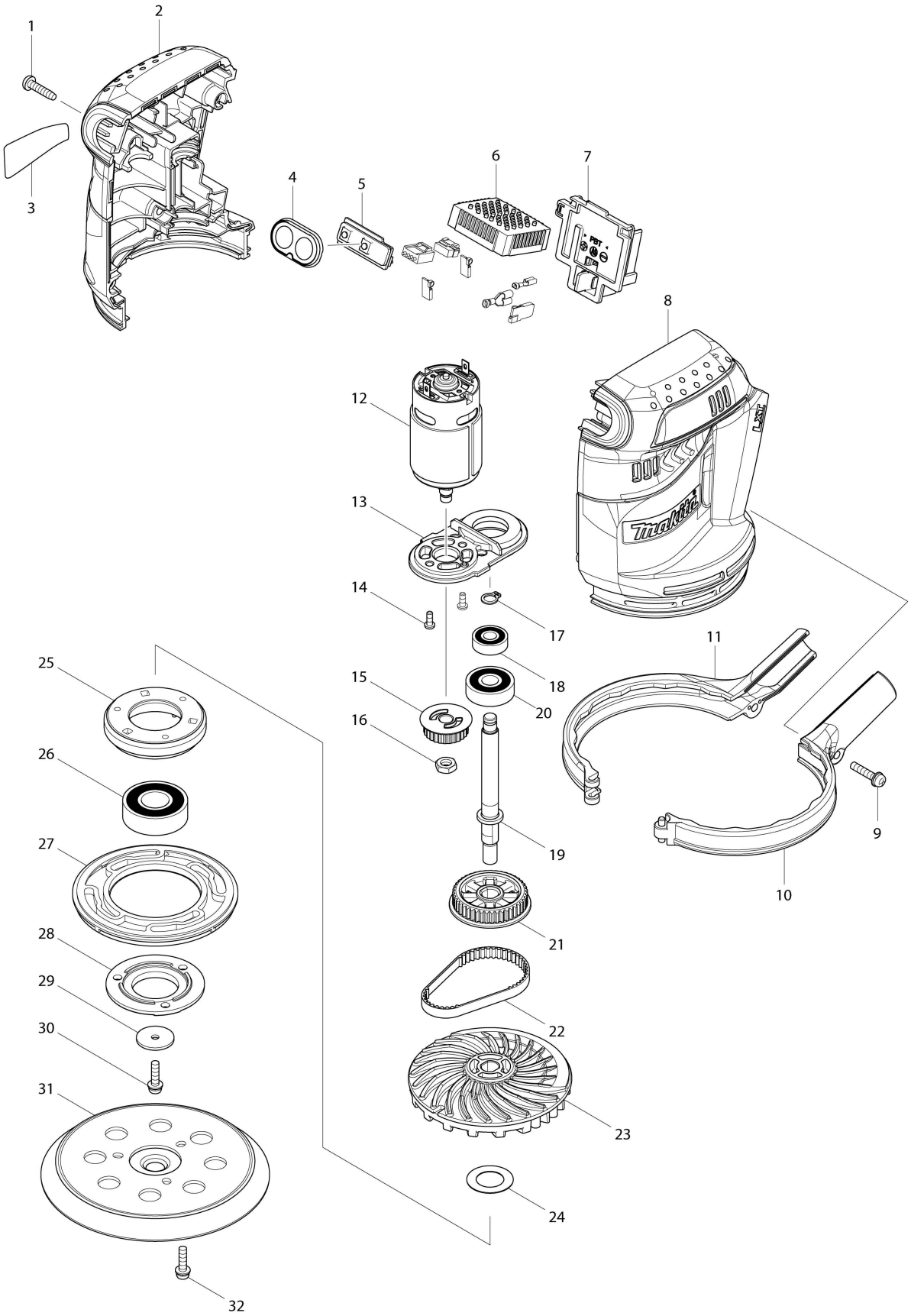

| GB | UNITED KINGDOM |
|---|---|

# DBO180 / 125MM CRDLS RNDM ORBIT SANDER

| Item | Parts No. | Parts Description | Qty | Remark |
|---|---|---|---|---|
| 001 | 265995-6 | TAPPING SCREW 4X18 | 5 | |
| 002 | 187423-0 | HOUSING SET | 1 | |
| 003 | 815F52-2 | DBO180 NAME PLATE | 1 | |
| 004 | 141419-5 | SWITCH PLATE COMPLETE | 1 | |
| 005 | 620115-3 | SWITCH UNIT | 1 | |
| 006E | 638982-2 | CONTROLLER UNIT | 1 | |
| 006F | 638982-2 | CONTROLLER UNIT | 1 | |
| 006G | 638982-2 | CONTROLLER UNIT | 1 | |
| 006H | 638982-2 | CONTROLLER UNIT | 1 | |
| 006I | 638982-2 | CONTROLLER UNIT | 1 | |
| 007 | 644808-8 | TERMINAL | 1 | |
| 008 | 187423-0 | HOUSING SET | 1 | |
| 009 | 911138-5 | P.H.SCREW M4X20 WITH WR | 1 | |
| 010 | 187360-8 | SKIRT SET | 1 | |
| 011 | 187360-8 | SKIRT SET | 1 | |
| 012 | 629952-2 | DC MOTOR | 1 | |
| 013 | 453632-6 | MOTOR BRACKET | 1 | |
| 014 | 265199-0 | + PAN HEAD SCREW M3X8 | 2 | |
| 015 | 222175-7 | PULLEY 7.5-24.1 | 1 | |
| 016 | 931303-0 | HEX. NUT M6 | 1 | |
| 017 | 961003-8 | RETAINING RING S-7 | 1 | |
| 018 | 210062-2 | BALL BEARING 607ZZ | 1 | |
| 019 | 326168-7 | SPINDLE | 1 | |
| 020 | 211092-6 | BALL BEARING 629DDW | 1 | |
| 021 | 222176-5 | PULLEY 7.5-40.3 | 1 | |
| 022 | 225095-4 | SYNCHRO BELT 6-174 | 1 | |
| 023 | 240136-5 | FAN 88 | 1 | |
| 024 | 267164-5 | FLAT WASHER 15 | 1 | |
| 025 | 318304-9 | BEARING BOX | 1 | |
| 026 | 211228-7 | BALL BEARING 6202DDW | 1 | |
| 027 | 424131-5 | BRAKE RING | 1 | |
| 028 | 318303-1 | BEARING BOX COVER | 1 | |
| 029 | 253739-6 | FLAT WASHER 4 | 1 | |
| 030 | 911128-8 | P.H.SCREW M4X16 WITH WR | 1 | |
| 031 | 743081-8 | PAD 123 | 1 | |
| 032 | 911128-8 | P.H.SCREW M4X16 WITH WR | 3 | |

E:DBO180Z(N)
F:DBO180RFE(H)
G:DBO180RFJ(H)
H:DBO180ZJ(N)
I:DBO180RMJ(H)
J:DBO180RTJ(H)